NOTES:
1) Tolerances unless stated:
   Linear: ± 0.5
2) Remove all burrs
3) Do not scale
4) 0.024mm thick Copper shim
5) 6mm constant gap

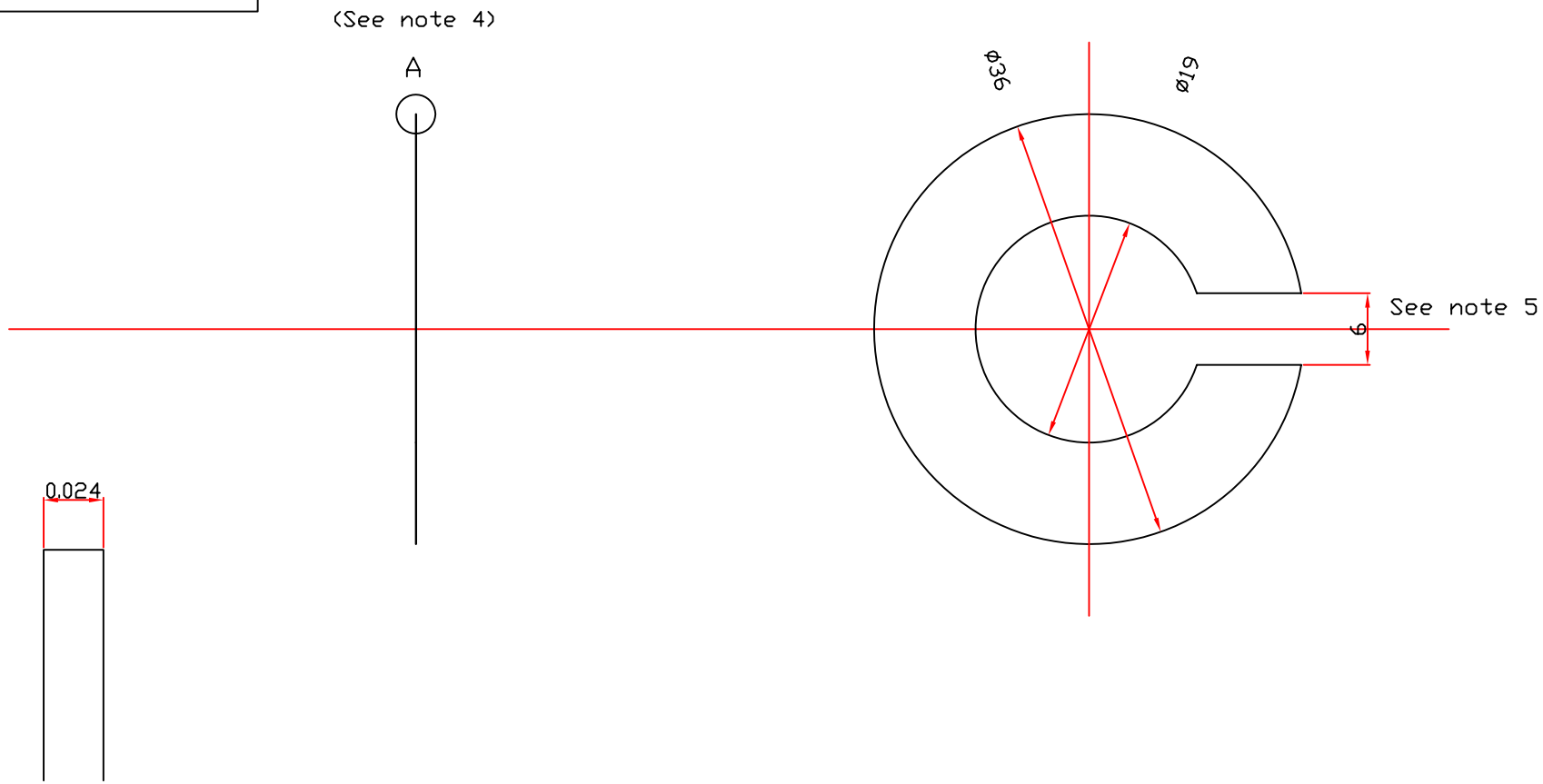

A (1000 : 1)

THIRD ANGLE PROJECTION DRAWING PREPARED IN ACCORDANCE TO BS308

GENERAL SURFACE FINISH: µm CLA R_A UNLESS OTHERWISE STATED

DIMENSIONS : mm

MATERIAL
Copper Shim / Foil

HEAT & SURFACE TREATMENT

ALL PROPRIETARY RIGHTS IN THE SUBJECT MATTER HEREOF ARE RESERVED BY SHEFFIELD UNIVERSITY AND NO PERMISSION IS GRANTED TO REPRODUCE THIS PRINT IN WHOLE OR IN PART. OR TO DISCLOSE ANY OF THE INFORMATION UPON IT TO OTHERS.

TITLE
MICE TARGET-
Stator Copper Shims

ISSUE	DATE	NOTES	CHK	APP.
	5/11/07	INITIAL ISSUE	MM	RN

UNIVERSITY OF SHEFFIELD
DEPARTMENT OF PHYSICS & ASTRONOMY
SHEFFIELD
S3 7RH
Tel: 0114-2223543

SCALE: 5 : 1
DATE: 5/11/07
DRAWN: M. MOHAMMAD
RAL REF: N/A
DRAWING NUMBER
TD-SU_15
A4